SA WG2 Meeting #122
26 – 30 June 2017, San Jose Del Cabo, Mexico

S2-174428

Discussion on 5G Control Plane Protocol Stacks

LG Electronics Inc.

LG Electronics

Issue 1. UE-5GC (NAS) protocol stack

- There are two alternative proposals for UE-5GC protocol stack (NAS)
  - Alt 1-1. Generic NAS layer between UE and AMF for the transport, and additional NAS protocol on top of Generic NAS layer for both UE-AMF and UE-SMF NAS protocol.

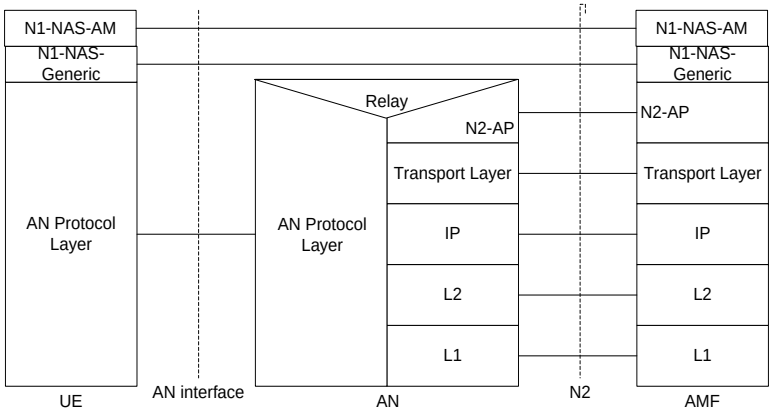

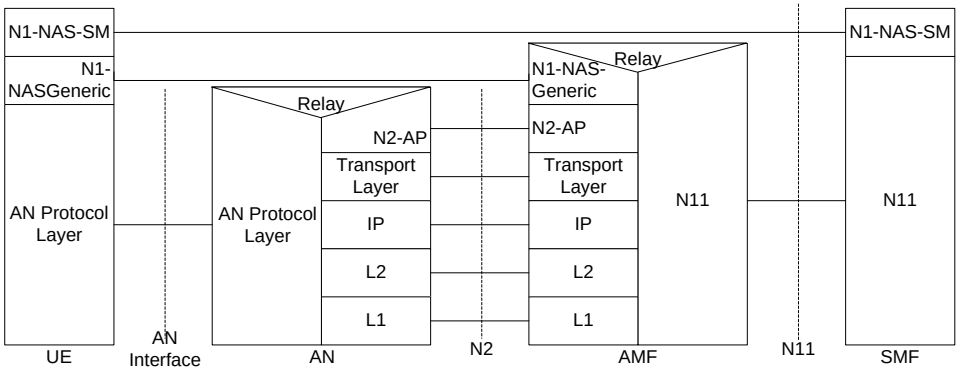

  - Alt 1-2. Single UE-AMF NAS protocol layer, and UE-SMF NAS protocol on the top of the UE-AMF NAS protocol.

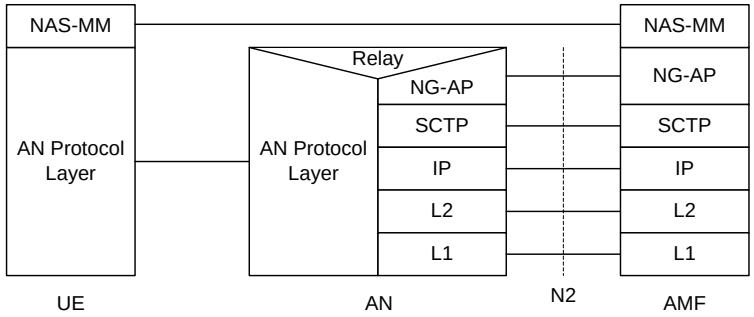

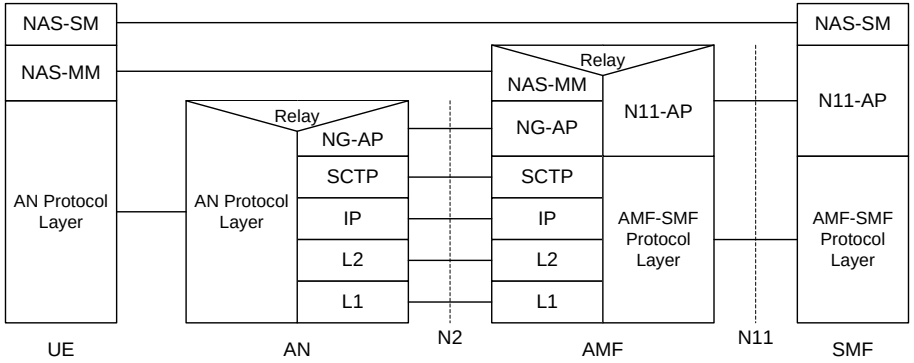

Issue 1. UE-5GC (NAS) protocol stack

- This issue is closely related to what is being discussed in CT1: ***How to design 5G NAS protocol?***
- CT1 has agreed the following, according to the TR 24.890 v0.2.0
  - 5G NAS consists of two main functions: **5GMM** and **5GSM**
  - **"A 5GSM message is piggybacked in a 5GMM message.** To this purpose, the 5GSM messages can be transmitted in an information element in the 5GMM messages. In this case, the UE, the AMF and the SM execute the 5GS MM procedure and the 5GSM procedure in parallel."
  - 5GMM procedure can be
    - 5GMM common procedures (e.g. **NAS transport (SM NAS/SMS/etc.)**, UE configuration update)
    - 5GMM specific procedures (e.g. registration/deregistration)
    - 5GMM CM procedures (e.g. service request / paging)

3GPP TR 24.890 V0.2.0 (2017-06)

Technical Report

3rd Generation Partnership Project;
Technical Specification Group Core Network and Terminals;
5G System – Phase 1;
CT WG1 Aspects
(Release 15)

7 Coordination between the protocols for 5GS mobility management and 5GS session management

A 5GS session management (5GSM) message is piggybacked in a 5GS mobility management (5GMM) message. To this purpose, the 5GSM messages can be transmitted in an information element in the 5GMM messages. In this case, the UE, the AMF and the SMF execute the 5GS MM procedure and the 5GSM procedure in parallel. The success of the 5GMM procedure is not dependent on the success of the piggybacked 5GSM procedure.

Editor's note: It is FFS whether an initial registration request procedure can be used to piggyback 5GSM messages.

The UE can only initiate the 5GSM procedure when there is a 5GMM context established at the UE and the AMF can only forward the 5GSM message for the 5GSM procedure initiated by the SMF when there is a 5GMM context established at the AMF.

Except for the 5GMM procedures piggybacking 5GSM messages, during 5GMM procedures the UE and the AMF shall suspend the transmission of 5GSM messages.

Editor's note: Which type of procedure will be included as 5GMM procedure is FFS.

Issue 1. UE-5GC (NAS) protocol stack

- So it seems that Alt 1-2 is more aligned with CT1 agreement.
  - In terms of protocol design, single protocol between the UE and the AMF (which is 5GMM) can convey the message between the UE and the SMF (5GSM).
  - **No additional sublayer or protocol is required.**
  - In CT1, one open issue is whether a single procedure can be used for both SM NAS payload and non-SM payload or not. [Not actual issue for the stage 2]

- For the naming of the protocol layer between the UE and the AMF,
  - It will be better to be aligned with stage 3 for the name, so "NAS-MM" would be a good choice.

- **Proposal 1: There is a single NAS protocol layer between the UE and the AMF. This NAS protocol is responsible for 5GMM functionalities, including transport of non-MM messages between the UE and the AMF. This layer can be referred as "NAS-MM"**

Issue 2. AN-5GC (N2) protocol stack

- Regarding the protocol stack between the AN and the AMF, RAN has agreed as follows according to TS 38.300 (v0.4.1)
  - The application layer signalling protocol is referred as **NG-AP**
  - The transport network layer is built on **IP** transport
  - **SCTP** is added on top of IP for the reliable transport of signalling messages

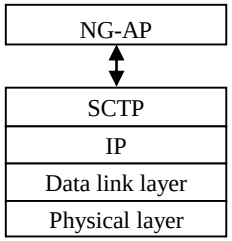

- For the protocol stack between the AN and the SMF, it is desired to achieve decoupling of AMF and SMF in terms of each N2 information.
  - This is already reflected in 502, while the SMF sends “N2 SM information” to the AMF and AMF just relays this information to the AN via NG-AP message.
  - In S2-172649, it is proposed to introduce “N2-AP-SM” (sub)layer between the AN and the SMF, which seems transparent to the AMF.
  - Whether there is needs for additional sublayer on the top of NG-AP and N11 is FFS for now..

Are these layer needed?

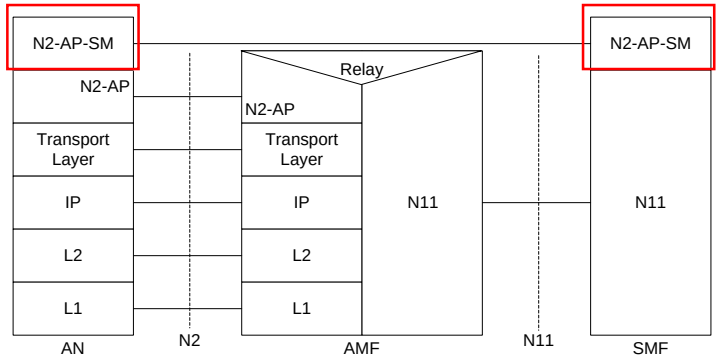

Issue 2. AN-5GC (N2) protocol stack

- **Point 2-1. Alignment with the current NG-AP protocol design**
  - As a protocol, NG-AP is mainly about the interface between the (R)AN and 5GC, especially **the AMF.**
  - Current design of the NG-AP is solely considering the AMF as an endpoint of 5GC.
  - In TS 38.413 (NG-AP), all the PDU session related procedures are specified between the gNB and **the AMF**

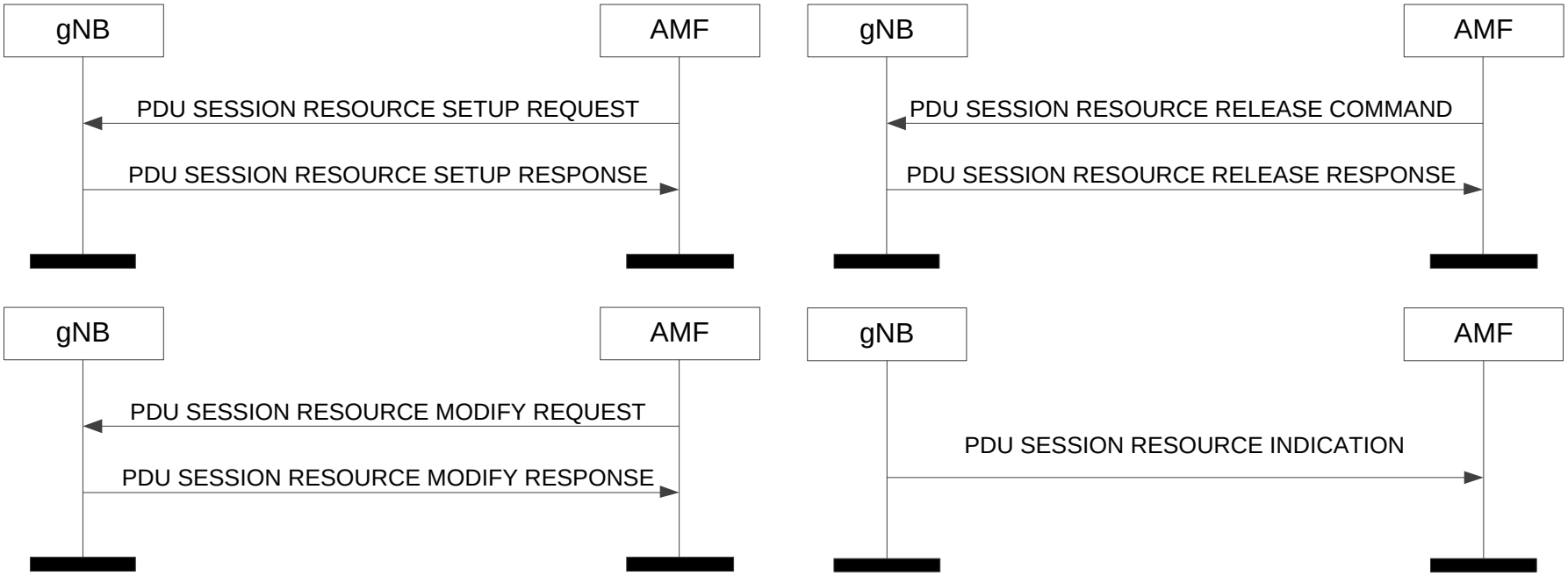

Issue 2. AN-5GC (N2) protocol stack

- **Point 2-2. Current SA2 agreements on the handling of N2 SM information**
  - While the purpose of this layer is for decoupling of AMF and SMF, it seems not necessary to introduce new layer for this purpose.
  - For example, current procedure only refers “N2 SM information” between the AN and the SMF in TS 23.502.
  - Even though it is a kind of Information Element in N11-AP and N2, it is okay if the AMF does not refer or manipulate the information, but just relay the field to the other protocol message.

- **Point 2-3. Mixture of two interfaces, N2 and N11.**
  - There are two interfaces between the AN and the SMF: N2 (NG-C) and N11, which one is a PtP i/f while the other is a SB i/f, and each one is handled in different WGs.
  - It is unclear how to handle additional layer which has two different types of lower layer protocol, and which WG will work on the stage 3 of the protocol.

Issue 2. AN-5GC (N2) protocol stack

- In conclusion, we would like to propose not to introduce a new additional E2E (sub)layer between the AN and the SMF for the concerns introduced.

- This has a huge impact on N2/N3 (or NG) protocols, which needs to be analysed and studied for the impact to other procedures, as well as the impact in RAN WG.
  - So it may be beneficial to wait until RAN3 (and maybe CT4) decide how to design NG-AP regarding SM related information.

- **Proposal 2: There is no need for introducing a new additional E2E (sub)layer between the AN and the SMF, above NG-AP in the AN and N11 in the SMF.**

Summary

- For UE-5GC (AMF/SMF) CP protocols stacks,
  - **Proposal 1: There is a single NAS protocol layer between the UE and the AMF. This NAS protocol is responsible for 5GMM functionalities, including transport of non-MM messages between UE and AMF. This layer can be referred as "NAS-MM"**

- For AN-5GC (AMF/SMF) CP protocol stacks,
  - **Proposal 2: There is no need for introducing a new additional E2E (sub)layer between the AN and the SMF, above NG-AP in the AN and N11 in the SMF.**

- Companion pCR **S2-174429** proposes changes and new protocol stacks.
- Aligning protocols with RAN agreements is proposed in a pCR **S2-174430**